TERAOKA

WIW-700

Extra wide automatic outer case marker



Searching for a New Balance

The DIGI WIW-700 is an extra wide, high capacity, dynamic outer case marker with simple and efficient software control.

With the Signature top labeller as standard, a side labelling option and extra wide 628mm belts, the WIW-700 is ideal for processing large boxes, outer cases and stacking crates.

- ✓ Full colour display and touch screen
- ✓ Clear and concise operation display
- ✓ Multi-lingual encoding
- ✓ Built-in label designer
- ✓ Flexible system integration
- ✓ Remote system control

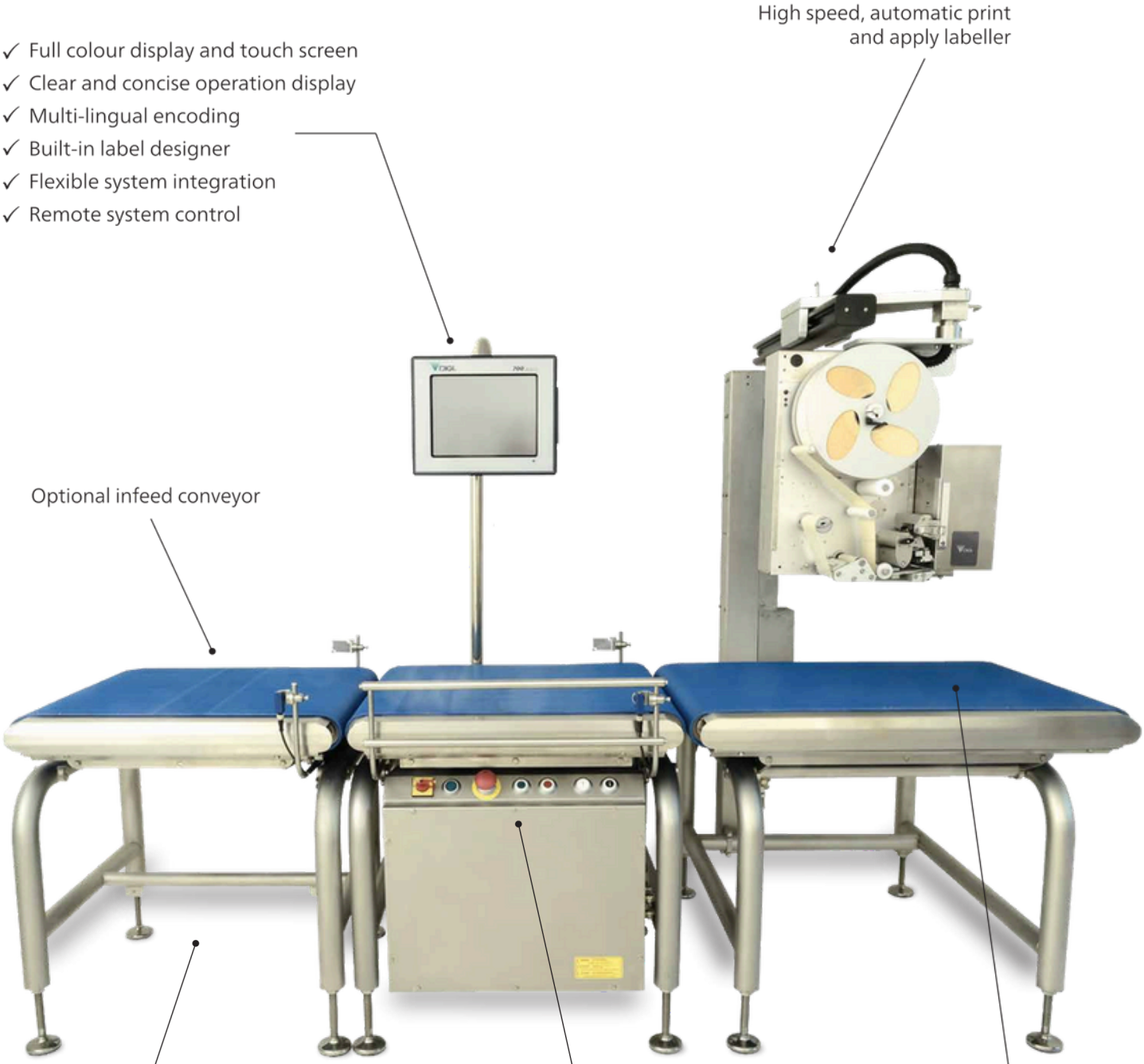

High Performance

The WIW-700 is a dynamic, modular outer case marker processing packs at a pre-set rate of up to 20 packs per minute.

An optional infeed module can be incorporated into the WIW-700 assembly providing a fluid feed onto the scale and allowing for a smooth weigh price labelling process from start to finish.



The multi-positioning touch screen post is extendable to the centre of the scale conveyor while the screen itself rotates through 300 degrees allowing for maximum accessibility across the wide scale bed.

Label Application

The WIW-700 is fitted with the Signature top labeller as standard. Compatible with our range of labellers the WIW-700 offers a choice of applicators to suit specific labelling requirements.



Side Label Application

An optional side mounted labeller unit is available promoting the application of labels to the side of the case or box and allowing packs to exceed the 400mm height restriction of a top labeller.

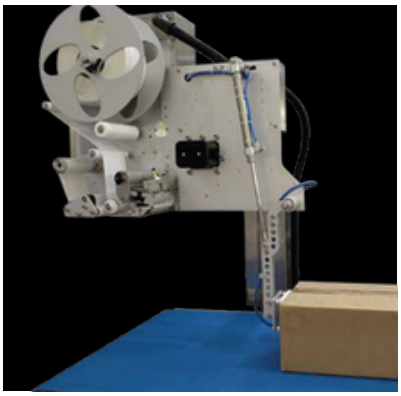

Front Label Application

A front labeller unit is also available enabling the application of labels to the front of the passing pack.



The extra wide 628mm belts are driven by stainless steel drum motors ensuring strong, reliable and consistent power to transfer heavier trays, boxes and cases. The surface finish of the belts is sufficiently durable and provides a positive grip for regular weights of up to 60kg.

Key Features

- ✓ Automatic or Stop-to-Weigh
- ✓ Up to 20ppm
- ✓ Weights up to 60Kg
- ✓ Weigh-Price-Labelling
- ✓ Case Marking
- ✓ Extra Wide 628mm Conveyors
- ✓ Catch Weight
- ✓ Fixed Weight
- ✓ Average Weight
- ✓ Optional Infeed
- ✓ Total Printing
- ✓ Networking
- ✓ Data Collection
- ✓ Remote Programming



WIW-700 Specifications

Performance

Classification	Automatic Stop to Weigh
Capacity	30Kg/10g 60Kg/20g
Weighing Mode	Catch Weight Fixed Weight Average Weight
Packs Per Minute	Up to 20
Pack Size	80-600mm Long 40-660mm Wide 240-400mm High 400mm+ attainable
Sensor Orientation	Horizontal
Flow Direction	Left to Right Right to Left

Requirements & Peripherals

Power supply	220-240V AC 50Hz 105-115V AC 60Hz
Air supply	4-6 bar 50-300 ltrs/min
Environment (operational)	0-30°C 32-86°F
Communications	Ethernet USB
Powerlift	Powered Labeller Positioning
Networking	Online Programming Online Monitoring Back Office Data Collection
Conveyor/Line Height	700-865mm

Operation

Screen	12.1" Colour Touch Display 15.2" Colour Touch Display *Optional
Screen Mounting	300 Degree Rotation
Software	Embedded Application
Operating System	Windows® OS
Language	Multi-lingual Unicode
Security	Hierarchical Password Protection Programmable User Limitations
PLU Selection	Pictorial Numerical
Label design	Built-in Application
Conveyor Belts	Textured

Options

Pack Guides	Infeed Bar Guides
Labellers	Signature Labeller * Classic Labeller Linerless Labeller Front Labeller Side Labeller Multiple Labellers LP-800 Printer
Conveyors	Infeed Conveyor Unit
Sensor Mount	Infeed Scale
Third Party Interface	Sleever Interface Barcode Reader Metal Detection

* Standard Configuration

Signature Labeller

Classification	Automatic
Application Speed	up to 100 packs per minute *Dependant on label size and host specification
Print Speed	up to 260mm/sec
Applicator Options	Airbox Touch
Print Head Width	80mm @ 300dpi 108mm @ 300pdi
Print Method	Direct Thermal
Print Process	Near Edge
Label Orientation	Top Application
Application Direction	Left to Right Right to Left
Label Size	W~30mm-120mm H~28mm-150mm
Max Label Roll	300mm (diameter)

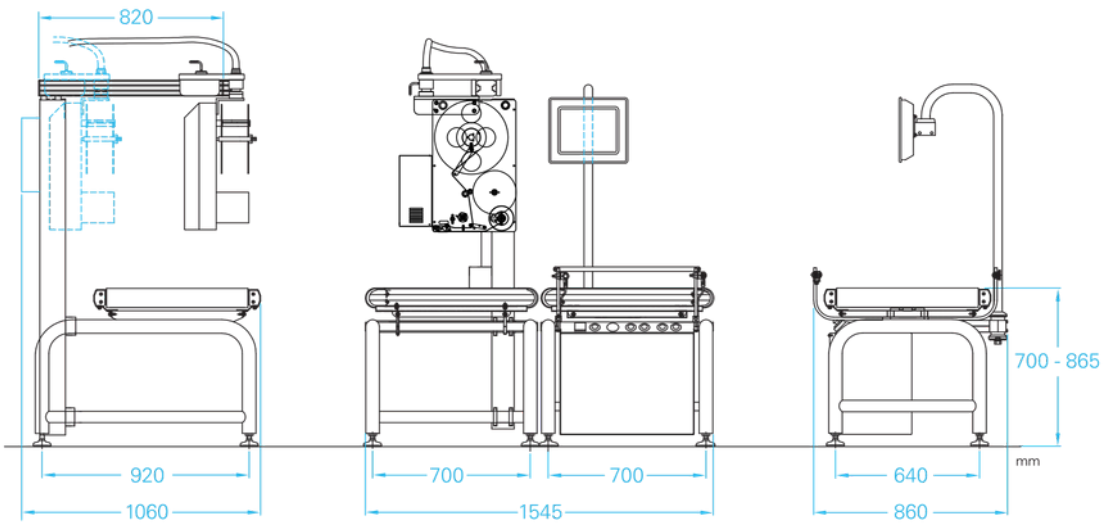

Issue 2. Document subject to change without notice (E.&O.E) ERRORS AND OMISSIONS EXCLUDED.

TERAOKA SOUTH AFRICA (PTY) LTD
Unit 6, City Deep Industrial Park,
Fortune Street, City Deep,
Johannesburg, 2049
TEL : +27 11 613 4291
EMAIL : info@teraoka.co.za
URL: www.teraoka.co.za

DISCLAIMER: The information contained in this brochure is provided for general informational purposes and is believed to be accurate at the time of publication. Teraoka South Africa (Pty) Ltd accepts no liability, to the extent permitted by South African law, for any loss or damage arising from reliance on information contained herein. Product specifications, features and availability are subject to change without prior notice. Nothing in this disclaimer excludes or limits any rights or obligations that cannot lawfully be excluded under applicable South African legislation, including the Consumer Protection Act 68 of 2008.
For the latest product, technical or commercial information, please contact Teraoka South Africa.

View the website page